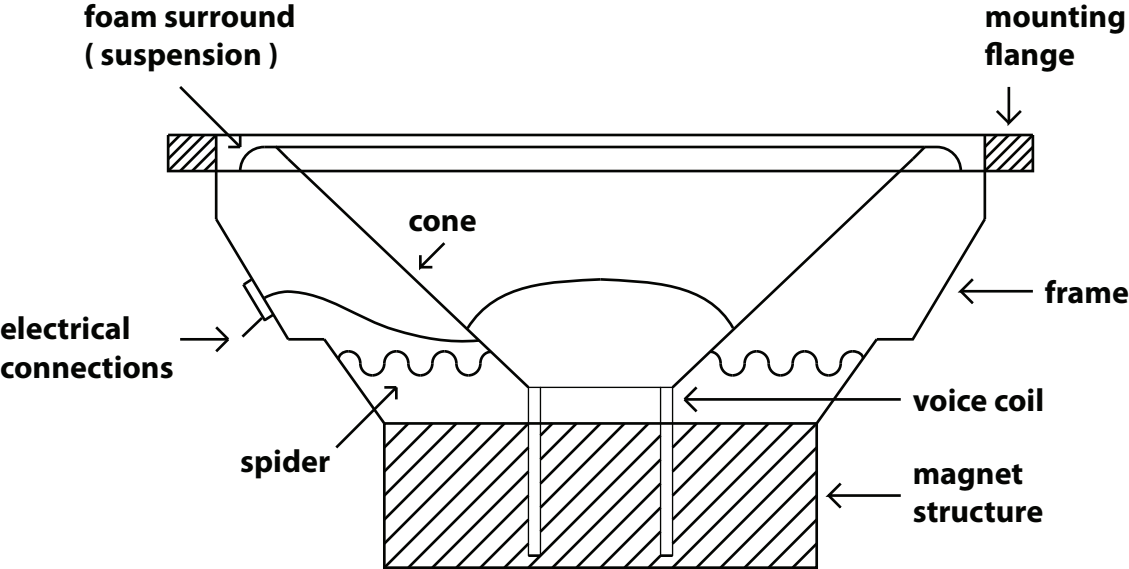
foam surround
(suspension)
mounting
flange
cone
frame
electrical
connections
voice coil
spider
magnet
structure